RANGER MINI

AgileX Robotics Team

User Manual V.1.0.0 2020.03

Safety information included in this manual, any individual or organization must read and understand these information. Please contact us at support@agilex.ai for any questions. It is important to follow and implement all assembly instructions and guidelines in this manual, especially pay attention the information with the warning signs.

⚠ Safety Information

The information in this manual does not include the design, installation and operation of a complete robot application, nor does it include all peripheral equipment that may affect the safety of the complete system. The design and use of the complete system need to comply with the safety requirements established in the standards and regulations of the country where the robot is installed. RANGER MINI integrators and end customers have the responsibility to ensure compliance with the applicable laws and regulations of relevant countries, and to ensure that there are no major dangers in the complete robot application. This includes but is not limited to the following:

1.Effectiveness and responsibility

- Make a risk assessment of the complete robot system.
- Connect the additional safety equipment of other machinery defined by the risk assessment together.
- Confirm that the design and installation of the entire robot system's peripheral equipment, including software and hardware systems, are correct.
- This robot does not have a complete autonomous mobile robot, including but not limited to automatic anti-collision, anti-falling, biological approach warning and other related safety functions. Related functions require integrators and end customers to follow relevant regulations and feasible laws and regulations for safety assessment , To ensure that the developed robot does not have any major hazards and safety hazards in actual applications.
- Collect all the documents in the technical file: including risk assessment and this manual.
- Know the possible safety risks before operating and using the equipment.

2.Environmental Considerations

- For the first use,please read this manual carefully to understand the basic operating content and operating specification.
- For remote control operation, select a relatively open area to use RANGER MINI, because RANGER MINI is not equipped with any automatic obstacle avoidance sensor.
- Use RANGER MINI always under 0℃~40℃ ambient temperature.
- If RANGER MINI is not configured with separate custom IP protection, its water and dust protection will be IP22 ONLY.

3.Pre-work Checklist

- Make sure each device has sufficient power.
- Make sure RANGER MINI does not have any obvious defects.
- Check if the remote controller battery has sufficient power.

4.Operation

- In remote control operation, make sure the area around is relatively spacious.
- Carry out remote control within the range of visibility.
- The maximum load of RANGER MINI is 50KG. When in use, ensure that the payload does not exceed 50KG.
- When installing an external extension on RANGER MINI, confirm the position of the center of mass of the extension and make sure it is at the center of rotation.
- Please charge in time when the device in low electricity alarm.
- When charging, make sure the ambient temperature is above 0℃.
- When RANGER MINI has a defect, please immediately stop using it to avoid secondary damage.
- When RANGER MINI has had a defect, please contact the relevant technical to deal with it, do not handle the defect by yourself.
- Always use RANGER MINI in the environment with the protection level requires for the equipment.
- Do not push RANGER MINI directly.

5.Maintenance

- If the tires are seriously worn, please replace in time.
- The battery should be charged regularly in 2 to 3 months when not used for a long time.

CONTENTS

1 RANGER MINI
Introduction.....1
1.1 Component list.....1
1.2 Tech specifications.....1
1.3 Required for development.....2

2 The Basics.....3
2.1 Status Indication.....3
2.2 Description of electrical interface.....4
2.3 Instruction on remote control.....4

3 Getting Started.....5
3.1 Use and operation.....5
3.2 CAN Message Protocol.....6
3.3 Firmware upgrades.....6
3.5 RANGER MINI ROS Package.....12

1 RANGER MINI Introduction

RANGER MINI is designed as a programmable all-direction UGV (UNMANNED GROUND VEHICLE), which is a chassis adapted with Ackerman steering. Compared with the four-wheel differential chassis, RANGER MINI has obvious advantages on ordinary cement and asphalt. Not only can the movement speed and load capacity be higher, but also reduces the wear on the structure and the tire, and is more stable and safe. Compared with the front wheel Ackerman model chassis, RANGER MINI not only reduces the turning radius, but also can zero turning. RANGER MINI combines the advantages of differential chassis and Ackerman chassis, it suitable for a variety of complex terrains. At the same time, it can equip with stereo camera, Lidar, GPS, IMU, manipulator and other equipment, which can be used in unmanned inspection, security, scientific research, exploration and logistics and other fields.

1.1 Component list

Name	Quantity
RANGER MINI Robot Body	x1
Battery Charger(AC 220V)	x1
Aviation plug（4Pin）	X1
FS remote control transmitter(Optional)	x1
USB to CAN communication module	x1
USB to RS232	x1
AgileX test module	x1

1.2 Tech specifications

Parameter Types	Items	Values
Mechanical specifications	L × W × H	558 × 492 × 420
	Wheelbase(mm)	360
	Front/rear wheelbase(mm)	360
	Weight(KG)	50KG
	Battery type	Lithium iron phosphate

	Battery specification	24V30AH (standard) 24V60AH (optional)
	Power drive motor	250W×4
	Steering drive motor	120W×4
	Parking type	Electronic brake
	Steering type	Four-wheel independent
	Code specification	1024 line
	Suspension	Swing arm suspension
Performance specifications	Protection level	IP22
	Maximum speed (m/s)	1.5
	Minimum turning radius (mm)	0
	Maximum climbing capacity (°)	10° with load
	Minimum ground clearance (mm)	212
	Maximum operating Time (h)	5-6
	Maximum Travel (km)	30
	Charging Time	4
	Operating temperature (℃)	-10~40
Control specifications	Control mode	Remote control Command control mode
	Remote control	24G/ Maximum distance 1Km
	Communication interface	CAN

1.3 Required for development

FS RC transmitter is provided (optional) in the factory setting of RANGER MINI, which allows users to control the chassis and complete mode switching, movement and steering control operations. CAN and RS232 interfaces on RANGER MINI can be used for user's customization.

2 The Basics

This section provides a brief introduction to the RANGER MINI mobile robot platform. It is convenient for users and developers to have a basic understanding of RANGER MINI chassis.

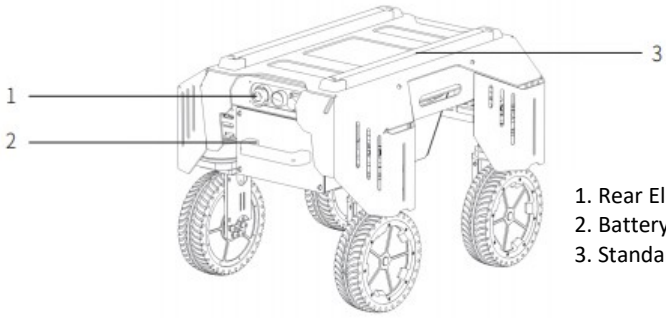

1. Rear Electrical Panel
2. Battery Change Panel
3. Standard Profile Support

Figure 2.1 Rear View

RANGER MINI adopts a modular and intelligent design concept. The composite design of solid tire and swing arm suspension on the power module, coupled with the powerful hub motor, makes the RANGER MINI robot chassis has strong pass ability and ground adapt ability, and can move flexibly on different ground. The use of the hub motor eliminates the need for complex transmission design structures, making the RANGER MINI more smaller and flexible. At the rear of RANGER MINI is equipped with an open electrical interfaces and communication interfaces, which is convenient for customers to carry out secondary development. The electrical interface adopts aviation waterproof connector in the design and selection, on the one hand, it is beneficial to the expansion and use for users, on the other hand, the robot chassis can be used in some serious environment. A standard extension aluminium bracket is installed on the top of the RANGER MINI, which is convenient for user to equip with external equipment for extended use.

2.1 Status Indication

Users can identify the status of vehicle body through the voltmeter, the beeper and CAN message on RANGER MINI. For details, please refer to Table 2.1.

Status	Description
Voltage	The current battery voltage can be read from the voltmeter on the rear electrical panel.
Robot powered on	Rear lights are switched on.
Low voltage alarm	When the battery voltage is lower than 24.5V (if the BMS is connected, the SOC is judged to be lower than 15%) , the vehicle body will give a beep-beep-beep sound as a warning.When the battery voltage is detected as lower than 24V(if the BMS is connected, the SOC is judged to be lower than 10%), SCOUT 2.0 will actively cut off the power supply to external extensions and drive to prevent the battery from being damaged. In this case, the chassis will not enable movement control and accept external command control.
Detailed status information	Read by CAN message

Table 2.0 Descriptions of Vehicle Status

2.2 Description of electrical interface

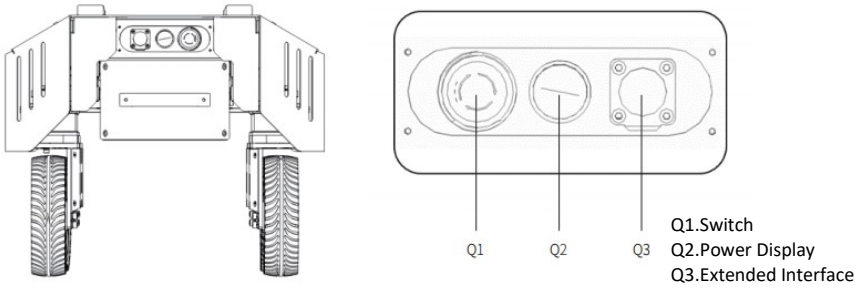

Figure 2.2 Rear View

There is a aviation extended interface equip at the rear of the RANGER MINI, the aviation extended interface equip with a set of batteries and CAN communication interface. It is convenient for users to provide power for the extended equipment and communication.(The load current can't exceed 15A, and the voltage range is 24~27V.) The specific definitions of pins are shown in the figure below. It should be noted that, the extended power supply here is internally controlled, which means the power supply will be actively cut off once the battery voltage drops below the safety voltage. Therefore, users need to notice that RANGER MINI will send a low voltage alarm before the threshold voltage is reached and also pay attention to battery charging during use.

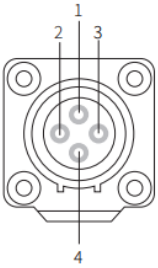

Pin No.	Pin Type	Function and Definition	Remarks
1	Power	VCC	Power positive, voltage range 24-27V, Load current can't exceed 15A.
2	Power	GND	Power negative
3	CAN	CAN_H	CAN bus high
4	CAN	CAN_L	CAN bus low

Figure 2.3 Description of Rear Aviation Interface Pins

2.3 Instruction on remote control

As shown in the picture of right, the function of the button is defined as: SWB is the control mode select button, dial to the top is command control mode, dial to the middle is remote control mode. SWC and SWD are the chassis motion mode setting switches. (Turn SWC and SWD to top, middle and bottom positions according to the combination shown in the

Figure 2.4 Schematic Diagram of Buttons on FS RC transmitter
SWC(UP)+SWD(UP)=Front and rear Ackerman mode
SWC(MID)=Spinning mode
SWC(UP)+SWD(DOWN)=Diagonal moving mode
SWC(DOWN)=Traverse mode
Note: The left and right direction of Si control the speed in traverse and spinning modes

figure to set the chassis to the

corresponding motion mode.) SWA is a reserved function switch that hasn't been opened yet. S1 is the throttle, the front and rear direction of the joystick is to control the forward and backward speed of the four-wheel independent steering chassis. (In front and rear Ackerman steering and diagonal moving modes.) The left and right direction of the joystick is to control the speed of traversing and spinning. The lift and right direction of the S2 joystick is to control the steering angle of the wheel, and POWER is the power button, press and hold at the same time to turn on.

The basic operation process of remote control:
After turning on the RANGER MINI, start the transmitter and set the SWB to the remote control mode to control the movement of the chassis though the transmitter.

3 Getting Started

This section introduces the basic operation and development of the RANGER MINI platform using the CAN bus interface. The secondary development of RANGER MINI is through the CAN bus protocol.

3.1 Use and operation

Check

- Check the condition of vehicle body.
  Check whether there are significant anomalies; if so, please contact the after-sale service.
  For first-time use, check whether Q3 (drive power supply switch) on the rear panel has been pressed down; if so, please press and release, then it is in the released state, and the RANGER MINI is in the power-off state.
- Turn on and turn off: The switch marked with “STOP” at the end is the power switch, which can be turned on clockwise (the voltmeter lights up) and pressed to turn off the power. After starting, it needs to wait for the chassis to complete the zero alignment process before control.
- Charging: Check the battery voltage, the normal voltage rage is 24~26.8V, if there is “beep-beep..” continuous buzzer sound, it means that the battery voltage is too low, please charge in time. The product equipped with a 10A charger. Plug the charger into the the charging socket at the left side of the chassis. Power on the charger, turn on the switch on the charger, enter the charging state.

CAN cable connection

- RANGER MINI deliver with a aviation male plug, the definitions of wire please refer to the figure below.
  Red: VCC (positive pole)
  Black: GND (negative pole)
  Blue: CAN_L
  Yellow: CAN_H

Figure 3.1 Schematic Diagram of Aviation Male Plug

Implementation of CAN command control

- Turn on the RANGER MINI normally, open the remote control, and then turn the control mode to command control, that is, switch the SWB mode selection of the remote control to the top. At this time, RANGER MINI will receive the command from CAN interface, and the host CAN can analyze the chassis state though the real-time data feedback from the CAN bus. For the detailed content of the protocol, please refer to CAN communication protocol.

3.2 CAN Message Protocol

RANGER MINI adopts CAN2.0B communication standard which has a communication baud rate of 500K and MOTOROLA message format. Though external CAN bus interface, the moving linear speed and the steering angle of chassis can be controlled; RANGER MINI will feedback on the current movement status information (include the integrated motion information and the detailed motion information of each wheel) and its system status information (include the error codes diagnoses by itself) in real time.

Command Name	System Status Feedback Command			
Sending node	Receiving node	ID	Cycle(ms)	Receive-timeout(ms)
Steer-by-wire chassis	Decision-making control unit	0x211	20ms	None
Data length	0x08			
Location	Function	Data type	Description	
byte [0]	Current status of vehicle	unsigned int8	0x00 Normal condition 0x02 System Error	
byte [1]	Control mode	unsigned int8	0x00 Stand by 0x01 CAN command control 0x03 Remote control	
byte [2] byte [3]	Battery voltage upper 8 bits Battery voltage lower 8 bits	unsigned int16	Actual voltage × 10(Accuracy 0.1V)	
byte [4] byte [5] byte [6] byte [7]	Failure information highest 8 bits Failure Information second highest 8 bits Failure Information second lowest 8 bits Failure Information lowest 8 bits	unsigned int32	Refer to Table1	

Table 1 Description of Failure Information

Description of Failure Information		
Byte	Bit	Description
byte [4]	bit[0]~bit[7]	Reserve, default value 0
byte [5]	bit [0]	Left back steering zero calibration state (0: Normal 1: Failure)
	bit [1]	Left front steering zero calibration state (0: Normal 1: Failure)
	bit [2]	Right front steering zero calibration state (0: Normal 1: Failure)
	bit [3]	Right back steering zero calibration state (0: Normal 1: Failure)
	bit [4]	Steering calibration timeout or block (0: Normal 1: Failure)
	bit [5]	Reserve, default value 0
	bit [6]	Reserve, default value 0

byte [6]	bit [7]	Reserve, default value 0
	bit [0]	Driver state failure (0: Normal 1: Failure)
	bit [1]	Upper communication connect state (0: Normal 1: Failure)
	bit [2]	Motor 5 driver communication failure (0: Normal 1: Failure)
	bit [3]	Motor 6 driver communication failure (0: Normal 1: Failure)
	bit [4]	Motor 7 driver communication failure (0: Normal 1: Failure)
	bit [5]	Motor 8 driver communication failure (0: Normal 1: Failure)
	bit [6]	Over temperature protection (0: Normal 1: Failure)
	bit [7]	Over current protection (0: Normal 1: Failure)
byte [7]	bit [0]	Battery over voltage failure (0: Normal 1: Failure)
	bit [1]	Reserve, default value 0
	bit [2]	Remote control lose contact protection (0: Normal 1: Failure)
	bit [3]	Motor 1 driver communication failure (0: Normal 1: Failure)
	bit [4]	Motor 2 driver communication failure (0: Normal 1: Failure)
	bit [5]	Motor 3 driver communication failure (0: Normal 1: Failure)
	bit [6]	Motor 4 driver communication failure (0: Normal 1: Failure)
	bit [7]	Reserve, default value 0

The motion control feedback frame command includes the feedback of linear and angular speed of chassis. Please refer to the table below.

Command Name	Motion Control Feedback Command			
Sending node	Receiving node	ID	Cycle（ms）	Receive-timeout(ms)
Steer-by-wire chassis	Decision-making control unit	0x221	20ms	None
Data length	0x08			
Position	Function	Data type	Description	
byte [0]	Moving speed upper 8 bits	signed int16	Actual speed X 1000 (Unit 0.001m/s)	
byte [1]	Moving speed lower 8 bits			

byte [2]	Reserve	-	0x00
byte [3]	Reserve	-	0x00
byte [4]	Reserve	-	0x00
byte [5]	Reserve	-	0x00
byte [6]	Steering angle upper 8 bits	signed int16	Actual angle X 100 (Unit 0.01°)
byte [7]	Steering angle lower 8 bits		

The motion control frame includes linear speed control command and steering angle control command . Please refer to the table below.

Command Name	Control Command			
Sending node	Receiving node	ID	Cycle（ms）	Receive-timeout(ms)
Decision-making control unit	Chassis node	0x111	20ms	500ms
Data length	0x08			
Position	Function	Data	Description	
byte [0]	Linear speed upper 8 bits	Signed int16	Moving speed, unit mm/s (Effective value +-1500, when the steering angle is greater than 20°, the effective value is +-750. Works in front and rear Ackerman and diagonal moving modes.)	
byte [1]	Linear speed lower 8 bits			
byte [2]	Reserve	__	0x00	
byte [3]	Reserve	__	0x00	
byte [4]	Spinning or traverse speed upper 8 bits	Signed int16	Moving speed, unit mm/s (Effective value + -1000, works in spinning and sideways moving modes)	
byte [5]	Spinning or traverse speed lower 8 bits			

byte [6]	Steering angle upper 8 bits	Signed int16	Steering angle, unit 0.01° (Effective value + -4000, works in front and rear Ackerman and diagonal moving modes.)
byte [7]	Steering angle lower 8 bits		

As shown in Figure 3.2.1, when the RANGER MINI is in the front and rear Ackerman mode, the feedback steering angle is (A1+A2)/2, and the negative value is the left direction, the positive value is right direction. The feedback speed is the average speed of the four wheels (is the linear speed of chassis motion), the negative value is reversing, positive value is go forward. If you need to check the detailed steering angle and speed information for each wheels, please refer to 0X271 and 0X281 feedback frame.

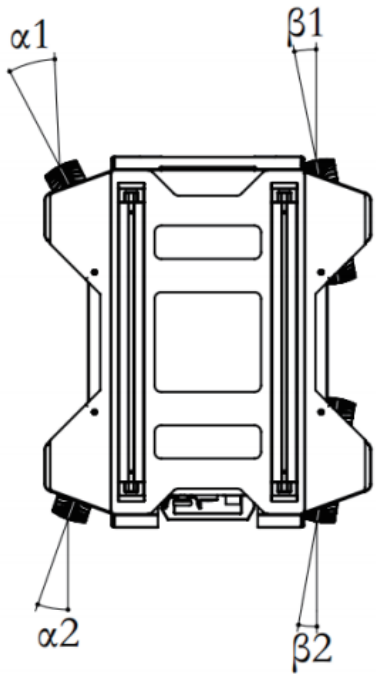

Figure 3.2.1 RANGER MINI Ackerman structure

As shown in Figure 3.2.2, when the RANGER MINI is in the diagonal moving mode, the feedback steering angle is (α 1+ α 2+ α 3+ α 4)/4, the negative value is left direction, the positive value is right direction. The feedback linear speed is the average speed of the four wheels, the negative value is reversing, positive value is go forward. If you need to check the detailed steering angle and speed information for each wheels, please refer to 0X271 and 0X281 feedback frame.

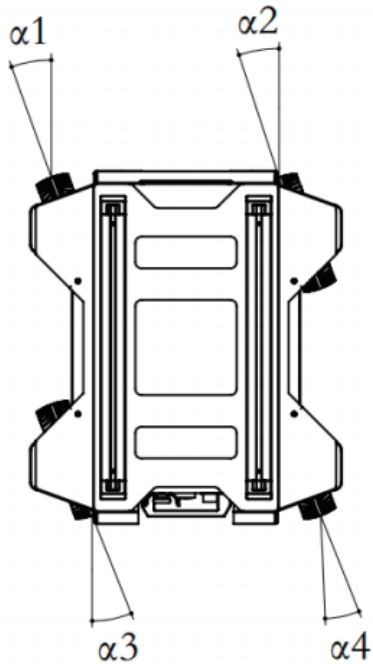

Figure 3.2.2 Diagonal Moving Structure of RANGER MINI

When the chassis is in spinning/traverse mode, the steering angle is fixed value and out of control, and the feedback of the steering angle is the average value of the absolute values of the four actual angles, α 1, α 2, α 3 and α 4. Chassis spinning/traverse speed can control by the command.
The mode setting frame is use to set the terminal control interface. The detailed protocol content is as follow.

Command		Control Command		
Sending node	Receiving node	ID	Cycle（ms）	Receive-timeout(ms)
Decision-making control unit	Chassis node	0x421	None	None

14

Data length	0x01		
Position	Function	Data type	Description
byte [0]	Control mode	unsigned int8	0x00 Standby mode 0x01 CAN command mode Enters standby mode by default when powering up

Control mode description: When the chassis is powered on and the remote control is disconnected, the control mode is standby mode by default. At this time, the chassis only receives the command of control mode, and other commands do not respond. To use CAN for control, you need to switch to CAN command mode. If turn on the remote control, the remote control has the highest authority and can shield the control of commands and switch the control mode.

The status setting frame is use to clear the system errors, and the specific protocol content is as bellow.

Command		Status Setting Command		
Sending node	Receiving node	ID	Cycle（ms）	Receive-timeout(ms)
Decision-making control unit	Chassis node	0x441	None	None
Data length	0x01			
Position	Function	Data type	Description	
byte [0]	Error clearing command	unsigned int8	0x00 Clear all nonfatal failure 0x01~ 0x08 Correspondingly clear the communication failure of the 1~8 motor drives respectively 0x09 Clear the battery under voltage failure and try to restore the power supply 0x0a Clear the remote control signal loss failure 0x0b~0x0e Correspondingly clear the communication failure of the 5~8 motor drives respectively 0x0f Clear over current failure 0x10 Clear over temperature failure	

15

Testing data : The following data is used for testing only.

1. The chassis moves forward at 0.15m/s.

byte [0]	byte [1]	byte [2]	byte [3]	byte [4]	byte [5]	byte [6]	byte [7]
0x01	0x96	0x00	0x00	0x00	0x00	0x00	0x00

2.The chassis steering angle is 10°.

byte [0]	byte [1]	byte [2]	byte [3]	byte [4]	byte [5]	byte [6]	byte [7]
0x00	0x00	0x00	0x00	0x00	0x00	0x03	0xe8

In addition to the feedback of chassis status, the information of the chassis feedback also includes the steering angle and speed of the four wheels, the current information of the motor, the encoder and the temperature information.
The specific protocol content is as follow:

PS: The eight motor numbers in the chassis correspond to: right front wheel No. 1, right rear wheel No. 2, left rear wheel No. 3, left front wheel No. 4, right front steering No. 5, right rear turn to No. 6, left rear steering No. 7 , and left front steering No. 8.

The feedback of motor rotational speed current position information

Command	Motor Rotational Speed Feedback Frame			
Sending node	Receiving node	ID	Cycle（ms）	Receive-timeout(ms)
Steer-by-wire chassis	Decision-making control unit	0x251~0x258	20 ms	None
Data length	0x08			
Position	Function	Data type	Description	
byte [0]	Motor rotational speed upper 8bits	signed int16	Motor rotational speed Unit RPM	
byte[1]	Motor rotational speed lower 8bits			

16

byte[2]	Motor current upper 8bits	signed int16	Motor current Unit 0.1A
byte[3]	Motor current lower 8bits		
byte[4]	Position highest bit	signed int32	Motor current position Unit:Pulse
byte[5]	Position second highest bit		
byte[6]	Position second lowest bit		
byte[7]	Position lowest bit		

The feedback of motor temperature voltage and status.

Command Name	Motor Driver Low Speed Information Feedback Frame			
Sending node	Receiving node	ID	Cycle（ms）	Receive-timeout(ms)
Steer-by-wire chassis	Decision-making control unit	0x261-0x268	100ms	None
Data length	0x08			
Position	Function	Data type	Description	
byte [0]	Driver voltage upper 8 bits	unsigned int16	Current driver voltage Unit 0.1V	
byte [1]	Driver voltage lower 8 bits			
byte [2]	Drive temperature upper 8 bits	signed int16	Unit: 1℃	
byte [3]	Drive temperature lower 8 bits			

17

byte [4]	Motor temperature	signed int8	Unit: 1℃
byte [5]	Driver status	unsigned int8	Refer to Table 2
byte [6]	Reserved	-	0x00
byte [7]	Reserved	-	0x00

Table 2 Driver Status

Byte	Bit	Description
byte [5]	bit [0]	Whether the power voltage is too low. (0: Normal 1: Low)
	bit [1]	Whether the motor is over-temperature. (0: Normal 1: Over-temperature)
	bit [2]	Whether the driver is over current. (0: Normal 1: Over-current)
	bit [3]	Whether the driver is over-temperature. (0: Normal 1: Over-temperature)
	bit [4]	Sensor status (0: Normal 1:Abnormal)
	bit [5]	Driver error status (0: Normal 1:Error)
	bit [6]	Driver enable state (0: Enable 1: Disable)
	bit [7]	Reserved

Four-wheel Angle Feedback

Command Name	Four-wheel Angle Information Feedback Frame			
Sending node	Receiving node	ID	Cycle（ms）	Receive-timeout(ms)
Steer-by-wire chassis	Decision-making control unit	0x271	20ms	None
Data length	0x08			
Position	Function	Data type	Description	
byte [0]	No. 5 steering angle upper 8 bits	signed int16	Current angle Unit 0.01°	
byte [1]	No. 5 steering angle lower 8 bits			

18

byte [2] byte [3]	No. 6 steering angle upper 8 bits No. 6 steering angle lower 8 bits	signed int16	Current angle Unit 0.01°
byte [4] byte [5]	No. 7 steering angle upper 8 bits No. 7 steering angle lower 8 bits	signed int16	Current angle Unit 0.01°
byte [6] byte [7]	No. 8 steering angle upper 8 bits No. 8 steering angle lower 8 bits	signed int16	Current angle Unit 0.01°

Four-wheel Speed Feedback

Command Name	Four-wheel Speed Information Feedback Frame			
Sending node	Receiving node	ID	Cycle（ms）	Receive-timeout(ms)
Steer-by-wire chassis	Decision-making control unit	0x281	20ms	None
Data length	0x08			
Position	Function	Data type	Description	
byte [0] byte [1]	No. 1 wheel speed upper 8 bits No. 1 wheel speed lower 8 bits	signed int16	Current speed Unit mm/s	

19

byte [2] byte [3]	No. 2 wheel speed upper 8 bits No. 2 wheel speed lower 8 bits	signed int16	Current speed Unit mm/s
byte [4] byte [5]	No. 3 wheel speed upper 8 bits No. 3 wheel speed lower 8 bits	signed int16	Current speed Unit mm/s
byte [6] byte [7]	No.4 wheel speed upper 8 bits No. 4 wheel speed lower 8 bits	signed int16	Current speed Unit mm/s

The motion model switching command is use to switch chassis motion model. The specific protocol content is as follows.

Command Name		Current Motion Model Feedback Command		
Sending node	Receiving node	ID	Cycle(ms)	Receive-timeout(ms)
Steer-by-wire chassis	Decision-making control unit	0x291	20ms	None
Data length	0x02			
Location	Function	Data type	Description	
byte [0]	Current chassis motion model	unsigned int8	0x00 Front and rear Ackerman mode 0x01 Diagonal moving mode 0x02 Spinning mode 0x03 Traverse	
byte [1]	Whether it is in the process of switching the motion model	unsigned int8	0x00 Switching complete 0x01 Switching the motion model Model switching process does not respond to speed control command	

20

The motion model switching command is use to switch chassis motion model. The specific protocol content is as follow.

Command Name	Motion Model Switching Command			
Sending node	Receiving node	ID	Cycle(ms)	Receive-timeout(ms)
Decision-making control unit	Chassis node	0x141	None	None
Data length	0x01			
Position	Function	Data type	Description	
byte [0]	Sport mode	unsigned int8	0x00 Front and rear Ackerman mode 0x01 Diagonal moving mode 0x02 Spinning mode 0x03 Traverse	

Command Name	BMS Data Feedback			
Sending node	Receiving node	ID	Cycle（ms）	Receive-timeout(ms)
Steer-by-wire chassis	Decision-making control unit	0x361	500ms	None
Data length	0x08			
Position	Function	Data type	Description	
byte [0]	Battery SOC	unsigned int8	Range 0~100	
byte [1]	Battery SOH	unsigned int8	Range 0~100	
byte [2]	Battery voltage upper 8 bits	unsigned int16	Unit:0.01V	
byte [3]	Battery voltage lower 8 bits			
byte [4]	Battery current upper 8 bits	signed int16	Unit:0.1A	
byte [5]	Battery current lower 8 bits			

21

byte [6]	Battery temperature upper 8 bits	signed int16	Unit:0.1°C
byte [7]	Battery temperature lower 8 bits		

Command Name	BMS Data Feedback			
Sending node	Receiving node	ID	Cycle（ms）	Receive-timeout(ms)
Steer-by-wire chassis	Decision-making control unit	0x362	500ms	None
Data length	0x04			
Position	Function	Data type	Description	
byte [0]	Alarm Status 1	unsigned int8	BIT1: Over-voltage BIT2: Under voltage BIT3: Over-temperature BIT4: Low temperature BIT7: Over discharge current	
byte [1]	Alarm Status 2	unsigned int8	BIT0: Charging over current	

22

byte [2]	Warning Status 1	unsigned int8	BIT1: Over-voltage BIT2: Under voltage BIT3: Over-temperature BIT4: Low temperature BIT7: Over discharge current
byte [3]	Warning Status 2	unsigned int8	BIT0: Charging over current

Command Name	Steering Zero Point Setting Command			
Sending node	Receiving node	ID	Cycle（ms）	Receive-timeout(ms)
Decision-making control unit	Chassis node	0x362	None	None
Data length	0x01			
Position	Function	Data type	Description	
byte [0] byte [1]	No.5 wheel zero point upper 8 bits No.5 wheel zero point lower 8 bits	signed int16	Zero point offset value setting Pulse; reference value -948	
byte [2] byte [3]	No.6 wheel zero point upper 8 bits No.5 wheel zero point lower 8 bits	signed int16	Zero point offset value setting Pulse; reference value 970	

23

byte [4] byte [5]	No.7 wheel zero point upper 8 bits No.7 wheel zero point lower 8 bits	signed int16	Zero point offset value setting Pulse; reference value -970
byte [6] byte [7]	No.8 wheel zero point upper 8 bits No.8 wheel zero point lower 8 bits	signed int16	Zero point offset value setting Pulse; reference value 958

Command Name	Steering Zero Point Setting Command			
Sending node	Receiving node	ID	Cycle（ms）	Receive-timeout(ms)
Decision-making control unit	Chassis node	0x438	None	None
Data length	0x01			
Position	Function	Data type	Description	
byte [0] byte [1]	No.5 wheel zero point upper 8 bits No.5 wheel zero point lower 8 bits	signed int16	Zero point offset value setting Pulse; reference value -948	
byte [2] byte [3]	No.6 wheel zero point upper 8 bits No.5 wheel zero point lower 8 bits	signed int16	Zero point offset value setting Pulse; reference value 970	
byte [4] byte [5]	No.7 wheel zero point upper 8 bits No.7 wheel zero point lower 8 bits	signed int16	Zero point offset value setting Pulse; reference value -970	

24

byte [6]	No.8 wheel zero point upper 8 bits	signed int16	Zero point offset value setting Pulse; reference value 958
byte [7]	No.8 wheel zero point lower 8 bits		

Command Name	Steering Zero Point Searching Command			
Sending node	Receiving node	ID	Cycle(ms)	Receive-timeout(ms)
Decision-making control unit	Chassis node	0x433	None	None
Data length	0x01			
Position	Function	Data type	Description	
byte [0]	Searching current steering zero point	unsigned int8	Fixed value: 0xAA Searching complete return to 0x43B frame	

3.3 Firmware upgrades

In order to facilitate users to upgrade the firmware version used by the four-wheel independent steering chassis and bring more perfect experience to customers, the four-wheel independent steering chassis provides hardware interface for firmware upgrade and corresponding client software. The client interface is show as following figure.

Upgrade preparation

·AgileX CAN testing model×1
·micro USB cable×1
·Four-wheel independent steering chassis×1
·Computer (WINDOWS Operating System)×1

Upgrade process

·Before connection, ensure the robot chassis is powered off;
·Connect the AgileX CAN testing model to the chassis aviation plugs;

25

·Connect the serial cable to the computer;
·Open the client software;
·Select the port number;
·Power on RANGER MINI chassis, and immediately click to start connection (RANGER MINI chassis will wait for 3s before power-on; if the waiting time is more than 3s, the application will be disconnect); if the connection succeeds, "connected successfully" will be prompted in the text box;
·Load BIN file;
·Click the Upgrade button, and wait for the prompt of upgrade completion;
·Disconnect the serial cable, power off the chassis, and then turn the power off and on again.

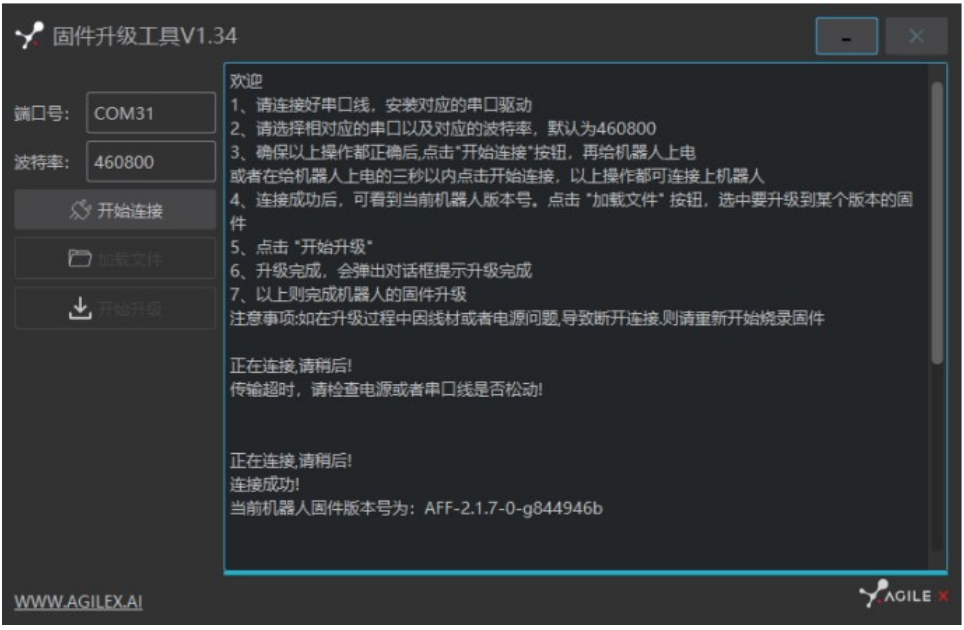

26

3.4 RANGER MINI ROS Package

ROS provide some standard operating system services, such as hardware abstraction, low-level device control, implementation of common function, inter process message and data packet management. ROS is based on a graph architecture, so that process of different nodes can receive, and aggregate various information (such as sensing, control, status, planning, etc.) Currently ROS mainly support UBUNTU.

Preparation

Hardware preparation

- CANlight can communication module ×1
- Thinkpad E470 notebook ×1
- AGILEX RANGER MINI mobile robot chassis ×1
- AGILEX RANGER MINI remote control FS-i6s ×1
- AGILEX RANGER MINI rear aviation plug ×1

Use example environment description

- Ubuntu 16.04 LTS (This is a test version, tasted on Ubuntu 18.04 LTS)
- ROS Kinetic (Subsequent versions are also tested)
- Git

Hardware connection and preparation

- Lead out the CAN wire of the RANGER MINI tail aviation plug, and connect CAN_H and CAN_L in the CAN wire to the CAN_TO_USB adapter respectively;
- Turn on the knob switch on the RANGER MINI mobile robot chassis; Connect the CAN_TO_USB to the usb of the notebook. The connection diagram is shown as follow.

External power supply:
1.Red: VCC (Battery positive)
2.Black: GND (Battery negative)

CAN:
3.Yellow: CAN_H
4.Blue: CAN_L

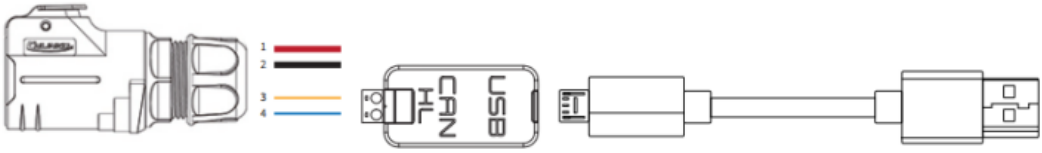

27

ROS installation and environment setting

For installation details, please refer to
http://wiki.ros.org/kinetic/Installation/Ubuntu

Test CANABLE hardware and CAN communication

Setting CAN-TO-USB adaptor

- Enable gs_usb kernel module

  $ sudo modprobe gs_usb

- Setting 500k Baud rate and enable can-to-usb adaptor

  $ sudo ip link set can0 up type can bitrate 500000

- If no error occurred in the previous steps, you should be able to use the command to view the can device immediately

  $ ifconfig -a

- Install and use can-utils to test hardware

  $ sudo apt install can-utils

- If the can-to-usb has been connected to the RANGER MINI robot this time, and the car has been turned on, use the following commands to monitor the data from the RANGER MINI chassis

  $ candump can0

28